THE GEOMAGNETIC EFFECTS ON THE MOTION OF AN ELECTRICALLY CHARGED ARTIFICIAL SATELLITE

DAVID VOKROUHLICKÝ

Department of Astronomy and Astrophysics, Charles University Prague, Svedska 8, 150 00 Prague, Czechoslovakia.

(Received: 5 October 1988; accepted: 5 October 1988)

Abstract. The orbital effects of the Lorentz force on the motion of an electrically charged artificial satellite moving in the Earth's magnetic field are determined. The geomagnetic field is considered as a multipole potential field and the satellite electrical charge is supposed to be constant. The relativistic perturbations of the main geomagnetic field are discussed briefly. The results are concentrated on the determination of the secular changes, and numerical values are computed for the case of the LAGEOS satellite. The results are discussed in the context of a possible detection of the Lense–Thirring effect analyzing the orbital perturbations of the LAGEOS and LAGEOS X satellites.

1. Introduction

The aim of this paper is the study of the changes in the motion of a close, electrically charged Earth artificial satellite, caused by the geomagnetic field. In such a case the influence of the geomagnetic field manifests itself predominantly by a Lorentz force. Since the electrical charge is generally small, the usage of the perturbation method is justified. In the following, we shall solve the Lagrange equations for the change of the Keplerian orbital elements. The numerical results will concern the orbit of LAGEOS. This is aimed at the improvement of the studied effects as published by Ciufolini (1987).

Several attempts were already made to assess the effects of Lorentz force to show in principle its negligible value with respect to some other, pre-important effects (e.g. Sehnal, 1969). However, the necessary high precission of orbital determination of some proposed space experiments (Ciufolini, 1987), requires a full knowledge of the electrodynamical effects connected with the Lorentz force, which we shall try to study in detail.

The important quantity which determines the magnitude of the effect is the satellite's electrical charge. We shall restrict ourselves to a constant charge since its variability would be of a still less precise consideration. The surface of a satellite is charged to a negative potential ϕ_0 (typically $\phi_0 = -1$V, see Al'pert *et al.*, 1964) and in the first approximation behaves like a spherical condenser with respect to the ionosphere vicinity. The estimation of the charge in such a case gives 10^{-9}C as an approximate maximum value for LAGEOS.

2. Disturbing Forces Arising from the Geomagnetic Field

Let us first estimate a possible contribution of the relativistic effects on the Earth's main magnetic field.

Celestial Mechanics and Dynamical Astronomy **46**: 85–104, 1989.

The Maxwell electrodynamical equations in a relativistic notation are written as[1]

$$\mathrm{Rot}\,\mathbf{H} = 0 \tag{1a}$$

$$\mathrm{Div}\,\mathbf{B} = 0 \tag{1b}$$

$$\mathbf{B} = \frac{\mu_0 \mathbf{H}}{g_{00}^{1/2}} \tag{1c}$$

(Note that we neglect electrical field in the system rotating with the Earth as well as electric currents in the vicinity of the Earth, so $\mathbf{E} = 0, \mathbf{j} = 0, \rho = 0$. We are then restricted to the precondition of stationarity of the **B**-field in this rotating system)

The definition of the operators in (1a) and (1b) is

$$\mathrm{Div}\,\mathbf{a} = \frac{1}{\gamma^{1/2}}(\gamma^{1/2} \cdot a^i)_{,i}; \quad [\mathrm{Rot}\,a]^k = \frac{1}{\gamma^{1/2}}[a_{i,j} - a_{j,i}](i,j,k \text{ cycl.})$$

where γ is the determinant of the metric tensor of a hypersurface $t = \text{const}$. Equation (1a) is fulfilled if $H_i = -V_{,i}$. Substitution into (1b) leads to the equation for the magnetic potential as

$$\nabla^2 V = \frac{g_{00}}{(-g)^{1/2}} \left(\frac{(-g)^{1/2}}{g_{00}} \cdot \Phi_{(k)} \right)_{,s} \cdot V_{,k} \cdot \delta^{sk} + \varphi_{(k)} \cdot V_{,sk} \cdot \delta^{sk} \tag{2}$$

where we supposed the development of the metrics in the form

$$g^{kl} = \Phi_{(k)} \cdot \delta^{kl}; \qquad \Phi_{(k)} = -1 + \varphi_{(k)} \tag{3}$$

Now, developing V into the powers of a small parameter $1/c$

$$V = V^{(0)} + 1/c \cdot V^{(1)} + 1/c^2 \cdot V^{(2)} + \cdots \tag{4}$$

we get to the zero order[2]

$$\nabla^2 V^{(0)} = 0 \tag{5}$$

$$V^{(0)} = \frac{a_e}{\mu_0} \sum_{n,k} \left(\frac{a_e}{r} \right)^{n+1} K_{nk} Y_{nk}(\vartheta, \varphi) \tag{6}$$

$$K_{nk} = (-1)^k \varepsilon_k \left(\frac{\pi}{2n+1} \frac{(n-k)!}{(n+k)!} \right)^{1/2} (g_n^k - i \cdot h_n^k) \tag{7}$$

This is the non-relativistic solution, whereas the terms $V^{(1)}, \ldots$ express the relativistic corrections. Using a development

$$\Phi_{(i)} \cdot \frac{(-g)^{1/2}}{g_{00}} = -1 + 1/c \cdot \Psi_{(i)}^{(1)} + 1/c^2 \cdot \Psi_{(i)}^{(2)} \ldots$$

$$\varphi_{(i)} = 1/c \cdot \varphi_{(i)}^{(1)} + 1/c^2 \cdot \varphi_{(i)}^{(2)} \ldots$$

[1] All main quantities used in the paper are summarized in the List of symbols at the end of the paper.

[2] We do not intend to go either into precise formulation of boundary conditions concerning $V^{(i)}$, nor into considering the role of the **B**-field on the r.h.s. of Einstein equations to calculate refined numbers of equation (4) $V^{(i)}, i > 1$. Our goal is only to verify that $V^{(1)}$ is really of order 1 in our problem, see Equation (9).

we get for $V^{(1)}$ the equation

$$\nabla^2 V^{(1)} = (\Psi^{(1)}_{(i)})_{,j} \cdot V^{(0)}_{,i} \cdot \delta^{ij} + \varphi^{(1)}_{(i)} \cdot V^{(0)}_{,ij} \cdot \delta^{ij} \tag{8}$$

We shall introduce here the metrics according to Brumberg, 1972

$$\Psi^{(1)}_{(r)} = -\frac{2G^{gr}M}{cr} r^2 \sin\vartheta \qquad \Psi^{(1)}_{(\vartheta)} = -\frac{2G^{gr}M}{cr} \sin\vartheta$$

$$\Psi^{(1)}_{(\varphi)} = -\frac{2G^{gr}M}{cr} \frac{1}{\sin\vartheta} \qquad \varphi^{(1)}_{(r)} = \frac{2G^{gr}M}{cr}$$

$$\varphi^{(1)}_{(\vartheta)} = \frac{2G^{gr}M}{cr} \frac{1}{r^2} \qquad \varphi^{(1)}_{(\varphi)} = \frac{2G^{gr}M}{cr} \frac{1}{r^2 \sin^2\vartheta}$$

This leads to

$$\nabla^2 V^{(1)} = -\frac{6G^{gr}M}{cr^2} V^{(0)}_{,r} - \frac{4G^{gr}M}{cr^3} \operatorname{cotg}\vartheta V^{(0)}_{,\vartheta} \tag{9}$$

The correction $V^{(1)}$ in the development (4) is $V^{(1)} \sim r^2(G^{gr}M/cr^3) \sim (G^{gr}M/cr) \sim 1$. This proves that the relativistic correction $1/c \cdot V^{(1)}$ in the development of the geomagnetic potential is of order $1/c \sim 10^{-9}$.

The value of magnetic induction (see Equation (1c)) can be determined from the knowledge of V

$$B^i = -\mu_0 V^{(0)}_{,i} + \frac{\mu_0}{c} \varphi^{(1)}_{(i)} V^{(0)}_{,i} - \mu_0 \frac{G^{gr}M}{c^2 r} V^{(0)}_{,i} - \frac{\mu_0}{c} V^{(1)}_{,i} + \tag{10}$$

$$+ o(2)$$

After a transformation into the inertial equatorial coordinate system (common for the definition of the Keplerian orbital elements), we get

$$B^r = -\mu_0 \left(1 - \frac{G^{gr}M}{c^2 r}\right) V^{(0)}_{,r} - \frac{\mu_0}{c} V^{(1)}_{,r} + o(2) \tag{11a}$$

$$B^\vartheta = -\mu_0 \left(1 - \frac{G^{gr}M}{c^2 r}\right) \frac{1}{r^2} V^{(0)}_{,\vartheta} - \frac{\mu_0}{cr^2} V^{(1)}_{,\vartheta} + o(2) \tag{11b}$$

$$B^\varphi = -\mu_0 \left(1 - \frac{G^{gr}M}{c^2 r}\right) \frac{V^{(0)}_{,\varphi}}{r^2 \sin^2\vartheta} - \frac{\mu_0}{cr^2 \sin^2\vartheta} V^{(1)}_{,\varphi} + o(2) \tag{11c}$$

$$E_r = -\mu_0 \Omega^\oplus \sin\vartheta V^{(0)}_{,\vartheta} + o(2) \tag{12a}$$

$$E_\vartheta = \mu_0 \Omega^\oplus r^2 \sin\vartheta V^{(0)}_{,r} + o(2) \tag{12b}$$

$$E_\varphi = 0 \tag{12c}$$

In the same coordinate system the momentum of the satellite is

$$p^i = m^0 \Gamma v^i \qquad v^i = \frac{dx^i}{dt} \tag{13a}$$

$$\Gamma = \left(\left(g_{00}^{1/2} - g_i \frac{v^i}{c} \right)^2 - \frac{v^2}{c^2} \right)^{-1/2} \tag{13b}$$

The equation of motion in the three-vector notation is

$$\frac{{}^{(3)}Dp_i}{\mathrm{d}t} = \Gamma^{-1} \gamma_{ik} F^k + mG_i \tag{14}$$

where ${}^{(3)}Dp_i/\mathrm{d}t$ is the absolute (covariant) derivative in the three-metrics, F^k are the contravariant components of the Lorentz four-vector force. The term $m \cdot G_i$ can be developed into the Newtonian gravitational attraction $(-m^0 \cdot U_{,i})$ and some further terms, which are of order $o(1)$ and higher with respect to parameter $1/c$. Thus the Newtonian term can be considered to define the elliptical orbit with classical perturbing effects by $J_2, J_4 \ldots$ etc. We shall not be interested in those perturbations. Therefore, we shall not take them into account.

The contribution of the first term in Equation (14) can be interpreted as a contribution of the Lorentz three-vector force. We shall write till the order $1/c$

$$F_i = Q(E_i + [\mathbf{v}, \mathbf{B}]_i) - \frac{Q}{c} \varphi_{(i)}^{(1)} (E_i + [\mathbf{v}, \mathbf{B}]_i) + \frac{Q}{c} g_i v^l E_l + o(2) \tag{15}$$

Using expansions

$$g^i = -g^{0i} = 1/c \cdot \varepsilon_{(i)}^{(1)} + 1/c^2 \cdot \varepsilon_{(i)}^{(2)} + \cdots \tag{16a}$$

$$\gamma^{1/2} = 1 + 1/c \cdot \omega^{(1)} + 1/c^2 \cdot \omega^{(2)} + \cdots \tag{16b}$$

We derive the components of the projection of the vector $\mathbf{F}(F_r, F_\vartheta, F_\varphi)$ in the set of unit vectors $(\mathbf{e}_r, \mathbf{e}_\vartheta, \mathbf{e}_\varphi)$. The same procedure applies with the velocity $\mathbf{v}$. Finally, we have

$$F_{(r)} = -Q\mu_0 \sin\vartheta \Omega^{\oplus} V_{,\vartheta}^{(0)} - Q\mu_0 \frac{v_{(\vartheta)}}{r \sin\vartheta} V_{,\varphi}^{(0)} + Q\mu_0 \frac{v_{(\varphi)}}{r} V_{,\vartheta}^{(0)} + $$
$$+ Q\mu_0 \frac{v_{(\varphi)}}{cr} V_{,\vartheta}^{(1)} - Q\mu_0 \frac{v_{(\vartheta)}}{cr \sin\vartheta} V_{,\varphi}^{(1)} + o(2) \tag{17a}$$

$$F_{(\vartheta)} = Q\mu_0 r \sin\vartheta \Omega^{\oplus} V_{,r}^{(0)} + Q\mu_0 \frac{v_{(r)}}{\sin\vartheta} V_{,\varphi}^{(0)} - Q\mu_0 v_{(\varphi)} V_{,r}^{(0)} + $$
$$+ Q\mu_0 \frac{v_{(r)}}{cr \sin\vartheta} V_{,\varphi}^{(1)} - Q\mu_0 \frac{v_{(\varphi)}}{c} V_{,r}^{(1)} + o(2) \tag{17b}$$

$$F_{(\varphi)} = Q\mu_0 v_{(\vartheta)} V_{,r}^{(0)} - Q\mu_0 \frac{v_{(r)}}{r} V_{,\vartheta}^{(0)} + Q\mu_0 \frac{v_{(\vartheta)}}{c} V_{,r}^{(1)} - $$
$$- Q\mu_0 \frac{v_{(\vartheta)}}{cr} V_{,r}^{(1)} + o(2) \tag{17c}$$

In the above equations, the first terms express the effects of the induced electrical field. Next ones describe the proper effects of the main magnetic field $V^{(0)}$, whereas the other

terms characterize the disturbing electromagnetic force of relativistic origin. These are of order $1/c \sim 10^{-9}$ and higher, thus we shall neglect them in the following.

3. Perturbations Arising from the Main Magnetic Field

They are represented by the second and third terms on the right sides of Equations (17a, b), while by the first and second term on the right side of Equation (17c). Since the velocity components are presented in those equations, it is better to use the components of the magnetic induction of Equation (11). Up to order 1, those equations can be transformed into

$$B_{(r)} = -\mu_0 V^{(0)}_{,r} + o(1) \tag{18a}$$

$$B_{(\vartheta)} = -\mu_0 \frac{1}{r} V^{(0)}_{,\vartheta} + o(1) \tag{18b}$$

$$B_{(\varphi)} = -\mu_0 \frac{1}{r \sin \vartheta} V^{(0)}_{,\varphi} + o(1) \tag{18c}$$

Considering the general expression for $V^{(0)}$ from Equation (6), we get

$$X = -B_{(\vartheta)} = \sum_{l,m} \left(\frac{a_e}{r}\right)^{1/2} \frac{K_{lm}}{\sin \vartheta} (l A_{lm} Y_{l+1,m} - (l+1) B_{lm} Y_{l-1,m}) \tag{19a}$$

$$Y = B_{(\varphi)} = -\sum_{l,m} \left(\frac{a_e}{r}\right)^{l+2} \frac{K_{lm}}{\sin \vartheta} im\, Y_{lm} \tag{19b}$$

$$Z = -B_{(r)} = -\sum_{l,m} \left(\frac{a_e}{r}\right)^{l+2} (l+1) K_{lm} Y_{lm} \tag{19c}$$

where

$$A_{lm} = \left(\frac{(l-m+1)\cdot(l+m+1)}{(2l+1)\cdot(2l+3)}\right)^{1/2}; \qquad B_{lm} = \left(\frac{(l-m)\cdot(l+m)}{(2l-1)\cdot(2l+1)}\right)^{1/2}$$

The quantities X, Y, Z in Equations (19) correspond to those, which were used in some previous papers (see Sehnal, 1969).

The spherical geometry gives us the connection between the orbital elements Ω, I and variables ϑ, α (α being the angle embraced by the orbital plane and plane of the local meridian);

$$\cos \vartheta = \sin(\upsilon + \omega) \cdot \sin I \tag{20a}$$

$$\sin \vartheta \cdot \sin \alpha = \cos I \tag{20b}$$

$$\sin \vartheta \cdot \cos \alpha = \cos(\upsilon + \omega) \cdot \sin I \tag{20c}$$

(Note that from now to the end of the paper υ expresses the true anomaly). The

components of the magnetic induction in the local reper fixed to the satellite orbit are

$$B_{(S)} = -Z \tag{21a}$$

$$B_{(T)} = X \cdot \cos\alpha + Y \cdot \sin\alpha \tag{21b}$$

$$B_{(W)} = X \cdot \sin\alpha - Y \cdot \cos\alpha \tag{21c}$$

After a brief algebraic manipulation we get

$$\begin{aligned} B_{(T)} = {} & \sum_{l,m}\sum_{k,v}\left(\frac{a_e}{r}\right)^{l+2}\frac{K_{lm}}{2^{2k}}\binom{2k}{k-v}(-1)^v \sin^{2k} I(lA_{lm}Y_{l+1,m} - (l+1)B_{lm}Y_{l-1,m}) * \\ & * \tfrac{1}{2}(\cos((2v+1)(\omega+v)) + \cos((2v-1)(\omega+v))) - \\ & - \sum_{l,m}\sum_{k,v}\left(\frac{a_e}{r}\right)^{l+2}\frac{K_{lm}}{2^{2k}}\binom{2k}{k-v}(-1)^v \cos I \sin^{2k} I \cos(2v(\omega+v)) im Y_{lm} \end{aligned} \tag{22a}$$

$$\begin{aligned} B_{(W)} = {} & \sum_{l,m}\sum_{k,v}\left(\frac{a_e}{r}\right)^{l+2}\frac{K_{lm}}{2^{2k}}\binom{2k}{k-v}(-1)^v \cos I \sin^{2k} I \cos(2v(\omega+v)) * \\ & * (lA_{lm}Y_{l+1,m} - (l+1)B_{lm}Y_{l-1,m}) + \\ & + \sum_{l,m}\sum_{k,v}\left(\frac{a_e}{r}\right)^{l+2}\frac{K_{lm}}{2^{2k}}\binom{2k}{k-v}(-1)^v \sin^{2k} I\, im\, Y_{lm} * \\ & * \tfrac{1}{2}(\cos((2v+1)(\omega+\upsilon)) + \cos((2v-1)(\omega+\upsilon))) \end{aligned} \tag{22b}$$

The components of velocity are given by

$$\upsilon_{(S)} = \dot{r} = \frac{nae}{(1-e*e)^{1/2}}\sin\upsilon \tag{23a}$$

$$\upsilon_{(T)} = r\dot{\upsilon} = na(1-e*e)^{1/2}\,\frac{a}{r} \tag{23b}$$

$$\upsilon_{(W)} = 0 \tag{23c}$$

The equations for the disturbing accelerations being finally

$$S = \frac{Q}{\mathfrak{m}}\upsilon_{(T)}B_{(W)} \tag{24a}$$

$$T = \frac{Q}{\mathfrak{m}}\upsilon_{(S)}B_{(W)} \tag{24b}$$

$$W = \frac{Q}{\mathfrak{m}}(\upsilon_{(S)}B_{(T)} - \upsilon_{(T)}B_{(S)}) \tag{24c}$$

The components of the disturbing accelerations are now to be introduced into the usual Lagrange equations for the Keplerian set of elements. After cumbersome and

lengthy work we get the final formulas

$$\frac{\mathrm{d}a}{\mathrm{d}t}=0 \tag{25a}$$

$$\begin{aligned}
\frac{\mathrm{d}e}{\mathrm{d}t}=&\frac{Q}{\mathfrak{m}}\sum_{l,k,v}\left(\frac{a_e}{a}\right)^{l+2}(-1)^v\sum_q\binom{2k}{k-v}\frac{\cos I}{2^{2k}(2l+1)}*\\
&*\left\{l\sum_{m,p}^{(1)}(l-m+1)F^{2k}_{l+1,m,p}\sum_{\xi=+-}\Delta^{1,2}_{\xi}\left(\begin{bmatrix}-h^m_l\\ g^m_l\end{bmatrix}\sin\Lambda^{\xi}_1-\begin{bmatrix}g^m_l\\ h^m_l\end{bmatrix}\cos\Lambda^{\xi}_1\right)-\right.\\
&\left.-(l+1)\sum_{m,p}^{(-1)}(l+m)F^{2k}_{l-1,m,p}\sum_{\xi=+-}\Delta^{1,0}_{\xi}\left(\begin{bmatrix}-h^m_l\\ g^m_l\end{bmatrix}\sin\Lambda^{\xi}_{-1}-\begin{bmatrix}g^m_l\\ h^m_l\end{bmatrix}\cos\Lambda^{\xi}_{-1}\right)\right\}+\\
&+\frac{Q}{\mathfrak{m}}\sum_{l,k,v}\left(\frac{a_e}{a}\right)^{l+2}(-1)^v\sum_q\binom{2k}{k-v}\sum_{m,p}\frac{m}{2^{2k+3}}F^{2k+1}_{l,m,p}\sum_{\xi=+-}\sum_{i=0,\pm2}\Delta^{1,1+i}_{\xi}*\\
&*\left(\begin{bmatrix}h^m_l\\ g^m_l\end{bmatrix}\sin\Lambda^{\xi}_i-\begin{bmatrix}-g^m_l\\ h^m_l\end{bmatrix}\cos\Lambda^{\xi}_i\right)
\end{aligned} \tag{25b}$$

$$\begin{aligned}
\frac{\mathrm{d}I}{\mathrm{d}t}=&\frac{Qe}{\mathfrak{m}(1-e*e)}\sum_{l,k,v}\left(\frac{a_e}{a}\right)^{l+2}(-1)^v\sum_q\binom{2k}{k-v}\frac{1}{2^{2k+4}(2l+1)}*\\
&*\left\{l\sum_{m,p}^{(1)}(l-m+1)F^{2k+1}_{l+1,m,p}\sum_{\xi=+-}\sum_{i=0,\pm2}\varepsilon_i\Delta^{1,2+i}_{\xi}\left(\begin{bmatrix}-h^m_l\\ g^m_l\end{bmatrix}\sin\Lambda^{\xi}_{1+i}-\right.\right.\\
&\left.-\begin{bmatrix}g^m_l\\ h^m_l\end{bmatrix}\cos\Lambda^{\xi}_{1+i}\right)-(l+1)\sum_{m,p}^{(-1)}(l+m)F^{2k+1}_{l-1,m,p}*\\
&\left.*\sum_{\xi=+-}\sum_{i=0,\pm2}\varepsilon_i\Delta^{1,i}_{\xi}\left(\begin{bmatrix}-h^m_l\\ g^m_l\end{bmatrix}\sin\Lambda^{\xi}_{-1+i}-\begin{bmatrix}g^m_l\\ h^m_l\end{bmatrix}\cos\Lambda^{\xi}_{-1+i}\right)\right\}-\\
&-\frac{Qe}{\mathfrak{m}(1-e*e)}\sum_{l,k,v}\left(\frac{a_e}{a}\right)^{l+2}(-1)^v\sum_q\binom{2k}{k-v}\frac{\cos I}{2^{2k+3}}\sum_{m,p}mF^{2k}_{l,m,p}*\\
&*\sum_{\xi=+-}\sum_{i=0,\pm2}\Delta^{1,1+i}_{\xi}\left(\begin{bmatrix}h^m_l\\ g^m_l\end{bmatrix}\sin\Lambda^{\xi}_i-\begin{bmatrix}-g^m_l\\ h^m_l\end{bmatrix}\cos\Lambda^{\xi}_i\right)-\\
&-\frac{Q}{2\mathfrak{m}}\sum_l\left(\frac{a_e}{a}\right)^{l+2}(l+1)\sum_q\sum_{m,p}F_{l,m,p}\sum_{i=\pm1}X_q^{-(l+2),(l-2p+i)}*\\
&*\left(\begin{bmatrix}g^m_l\\ -h^m_l\end{bmatrix}\sin\Lambda^0_i+\begin{bmatrix}h^m_l\\ g^m_l\end{bmatrix}\cos\Lambda^0_i\right)
\end{aligned} \tag{25c}$$

$$\frac{\mathrm{d}\Omega}{\mathrm{d}t} = -\frac{Qe}{\mathfrak{m}(1-e*e)\sin I}\sum_{l,k,\nu}\left(\frac{a_e}{a}\right)^{l+2}(-1)^{\nu}\sum_{q}\binom{2k}{k-\nu}\frac{1}{2^{2k+4}(2l+1)}*$$

$$*\left\{l\sum_{m,p}^{(1)}(l-m+1)F^{2k+1}_{l+1,m,p}\sum_{\xi=+-}\sum_{i=\pm 2}i\Delta^{1,2+i}_{\xi}\left(\begin{bmatrix} g_l^m \\ h_l^m\end{bmatrix}\sin\Lambda^{\xi}_{1+i}+\right.\right.$$

$$\left.+\begin{bmatrix} -h_l^m \\ g_l^m\end{bmatrix}\cos\Lambda^{\xi}_{1+i}\right)-(l+1)\sum_{m,p}^{(-1)}(l+m)F^{2k+1}_{l-1,m,p}*$$

$$\left.*\sum_{\xi=+-}\sum_{i=\pm 2}i\Delta^{1,i}_{\xi}\left(\begin{bmatrix} g_l^m \\ h_l^m\end{bmatrix}\sin\Lambda^{\xi}_{-1+i}+\begin{bmatrix} -h_l^m \\ g_l^m\end{bmatrix}\cos\Lambda^{\xi}_{-1+i}\right)\right\}+$$

$$+\frac{Qe}{\mathfrak{m}(1-e*e)\sin I}\sum_{l,k,\nu}\left(\frac{a_e}{a}\right)^{l+2}(-1)^{\nu}\sum_{q}\binom{2k}{k-\nu}\frac{\cos I}{2^{2k+3}}*$$

$$\sum_{m,p}mF^{2k}_{l,m,p}\sum_{\xi=+-}\sum_{i=\pm 1}i*\Delta^{1,1+i}_{\xi}\left(\begin{bmatrix} -g_l^m \\ h_l^m\end{bmatrix}\sin\Lambda^{\xi}_{i}+\begin{bmatrix} h_l^m \\ g_l^m\end{bmatrix}\cos\Lambda^{\xi}_{i}\right)-$$

$$-\frac{Q}{2\mathfrak{m}\sin I}\sum_{l}\left(\frac{a_e}{a}\right)^{l+2}(l+1)\sum_{q}\sum_{m,p}F_{l,m,p}\sum_{i=\pm 1}iX_q^{-(l+2),(l-2p+i)}*$$

$$*\left(\begin{bmatrix} g_l^m \\ -h_l^m\end{bmatrix}\sin\Lambda^{0}_{i}-\begin{bmatrix} h_l^m \\ g_l^m\end{bmatrix}\cos\Lambda^{0}_{i}\right) \tag{25d}$$

$$\frac{\mathrm{d}\omega}{\mathrm{d}t} = -Q\frac{1-e*e}{\mathfrak{m}e}\sum_{l,k,\nu}\left(\frac{a_e}{a}\right)^{l+2}(-1)^{\nu}\sum_{q}\binom{2k}{k-\nu}\frac{\cos I}{2^{2k+2}(2l+1)}*$$

$$*\left\{l\sum_{m,p}^{(1)}(l-m+1)F^{2k}_{l+1,m,p}\sum_{\xi=+-}\nabla^{3,2}_{\xi}\left(\begin{bmatrix} g_l^m \\ h_l^m\end{bmatrix}\sin\Lambda^{\xi}_{1}+\begin{bmatrix} -h_l^m \\ g_l^m\end{bmatrix}\cos\Lambda^{\xi}_{1}\right)-\right.$$

$$-(l+1)\sum_{m,p}^{(-1)}(l+m)F^{2k}_{l-1,m,p}\sum_{\xi=+-}\nabla^{3,0}_{\xi}\left(\begin{bmatrix} g_l^m \\ h_l^m\end{bmatrix}\sin\Lambda^{\xi}_{-1}+\right.$$

$$\left.\left.+\begin{bmatrix} -h_l^m \\ g_l^m\end{bmatrix}\cos\Lambda^{\xi}_{-1}\right)\right\}-Q\frac{1-e*e}{\mathfrak{m}e}\sum_{l,k,\nu}\left(\frac{a_e}{a}\right)^{l+2}(-1)^{\nu}\sum_{q}\binom{2k}{k-\nu}*$$

$$*\sum_{m,p}\frac{m}{2^{2k+3}}F^{2k+1}_{l,m,p}\sum_{\xi=+-}\sum_{i=\pm 1}\nabla^{3,1+i}_{\xi}*\left(\begin{bmatrix} -g_l^m \\ h_l^m\end{bmatrix}\sin\Lambda^{\xi}_{i}+\begin{bmatrix} h_l^m \\ g_l^m\end{bmatrix}\cos\Lambda^{\xi}_{i}\right)+$$

$$+\frac{Q}{\mathfrak{m}}\sum_{l,k,\nu}\left(\frac{a_e}{a}\right)^{l+2}(-1)^{\nu}\sum_{q}\binom{2k}{k-\nu}\frac{\cos I}{2^{2k+3}(2l+1)}*$$

$$*\left\{l\sum_{m,p}^{(1)}(l-m+1)F^{2k}_{l+1,m,p}\sum_{\xi=+-}\sum_{i=\pm 1}i\Delta^{2,1+i}_{\xi}\left(\begin{bmatrix} g_l^m \\ h_l^m\end{bmatrix}\sin\Lambda^{\xi}_{1}+\right.\right.$$

$$\left.+\begin{bmatrix} -h_l^m \\ g_l^m\end{bmatrix}\cos\Lambda^{\xi}_{1}\right)-(l+1)\sum_{m,p}^{(-1)}(l+m)F^{2k}_{l-1,m,p}*$$

$$* \sum_{\xi=+-} \sum_{i=\pm 1} i\Delta_{\xi}^{2,-1+i}\left(\begin{bmatrix} g_l^m \\ h_l^m \end{bmatrix} \sin \Lambda_{-1}^{\xi} + \begin{bmatrix} -h_l^m \\ g_l^m \end{bmatrix} \sin \Lambda_{-1}^{\xi}\right)\Bigg\} +$$

$$-\frac{Q}{\mathfrak{m}(1-e*e)} \sum_{l,k,v} \left(\frac{a_e}{a}\right)^{l+2} (-1)^v \sum_q \binom{2k}{k-v} \frac{\cos I}{2^{2k+3}(2l+1)} *$$

$$* \Bigg\{ l \sum_{m,p}^{(1)} (l-m+1) F_{l+1,m,p}^{2k} \sum_{\xi=+-} \sum_{i=\pm 1} i\Delta_{\xi}^{1,1+i}\left(\begin{bmatrix} g_l^m \\ h_l^m \end{bmatrix} \sin \Lambda_1^{\xi} +\right.$$

$$\left. + \begin{bmatrix} -h_l^m \\ g_l^m \end{bmatrix} \cos \Lambda_1^{\xi}\right) - (l+1) \sum_{m,p}^{(-1)} (l+m) F_{l-1,m,p}^{2k} *$$

$$* \sum_{\xi=+-} \sum_{i=\pm 1} i\Delta_{\xi}^{1,-1+i}\left(\begin{bmatrix} g_l^m \\ h_l^m \end{bmatrix} \sin \Lambda_{-1}^{\xi} + \begin{bmatrix} -h_l^m \\ g_l^m \end{bmatrix} \cos \Lambda_{-1}^{\xi}\right)\Bigg\} +$$

$$+ \frac{Q}{\mathfrak{m}} \sum_{l,k,v} \left(\frac{a_e}{a}\right)^{l+2} (-1)^v \sum_q \binom{2k}{k-v} \sum_{m,p} \frac{m}{2^{2k+4}} F_{l,m,p}^{2k+1} \sum_{\xi=+-} \sum_{i,j=\pm 1} j\Delta_{\xi}^{2,i+j} *$$

$$* \left(\begin{bmatrix} -g_l^m \\ h_l^m \end{bmatrix} \sin \Lambda_i^{\xi} + \begin{bmatrix} h_l^m \\ g_l^m \end{bmatrix} \cos \Lambda_i^{\xi}\right) + \frac{Q}{\mathfrak{m}} \sum_{l,k,v} \left(\frac{a_e}{a}\right)^{l+2} (-1)^v \sum_q \binom{2k}{k-v} *$$

$$* \sum_{m,p} \frac{m}{2^{2k+4}} F_{l,m,p}^{2k+1} \sum_{\xi=+-} \sum_{i,j=\pm 1} j\Delta_{\xi}^{1,i+j} * \left(\begin{bmatrix} -g_l^m \\ h_l^m \end{bmatrix} \sin \Lambda_i^{\xi} +\right.$$

$$\left. + \begin{bmatrix} h_l^m \\ g_l^m \end{bmatrix} \cos \Lambda_i^{\xi}\right) - \cos I \cdot \frac{d\Omega}{dt} \tag{25e}$$

$$\frac{dl}{dt} = n - \frac{Q}{\mathfrak{m}}(1-e*e)^{1/2} \sum_{l,k,v} \left(\frac{a_e}{a}\right)^{l+2} (-1)^v \sum_q \binom{2k}{k-v} \frac{\cos I}{2^{2k}(2l+1)} *$$

$$* \Bigg\{ l \sum_{m,p}^{(1)} (l-m+1) F_{l+1,m,p}^{2k} \sum_{\xi=+-} X_q^{-(l+2),(l-2p\xi 2v+1)} *$$

$$* \left(\begin{bmatrix} g_l^m \\ h_l^m \end{bmatrix} \sin \Lambda_1^{\xi} + \begin{bmatrix} -h_l^m \\ g_l^m \end{bmatrix} \cos \Lambda_1^{\xi}\right) - (l+1) \sum_{m,p}^{(-1)} (l+m) F_{l-1,m,p}^{2k} *$$

$$* \sum_{\xi=+-} X_q^{-(l+2),(l-2p\xi 2v-1)} * \left(\begin{bmatrix} g_l^m \\ h_l^m \end{bmatrix} \sin \Lambda_{-1}^{\xi} + \begin{bmatrix} -h_l^m \\ g_l^m \end{bmatrix} \cos \Lambda_{-1}^{\xi}\right)\Bigg\} -$$

$$- \frac{Q}{\mathfrak{m}}(1-e*e)^{1/2} \sum_{l,k,v} \left(\frac{a_e}{a}\right)^{l+2} (-1)^v \sum_q \binom{2k}{k-v} \frac{m}{2^{2k}} F_{l,m,p}^{2k+1} *$$

$$* \sum_{\xi=+-} \sum_{i=\pm 1} X_q^{-(l+2),(l-2p\xi 2v+i)} \left(\begin{bmatrix} -g_l^m \\ h_l^m \end{bmatrix} \sin \Lambda_i^{\xi} -\right.$$

$$\left. - \begin{bmatrix} h_l^m \\ g_l^m \end{bmatrix} \cos \Lambda_i^{\xi}\right) - \cos I \cdot (1-e*e)^{1/2} \frac{d\Omega}{dt} - (1-e*e)^{1/2} \frac{d\omega}{dt}. \tag{25f}$$

4. Secular Perturbations Due to the Main Geomagnetic Field

From the Equations (25b,c) we immediately get

$$\left(\frac{\mathrm{d}e}{\mathrm{d}t}\right)_{\mathrm{sec}} = 0 \tag{26a}$$

$$\left(\frac{\mathrm{d}I}{\mathrm{d}t}\right)_{\mathrm{sec}} = 0 \tag{26b}$$

However, both elements suffer the long periodic ($q = 0$) as well as short periodic ($q \neq 0$) perturbations. Since $X_0^{n,k} = X_0^{n,-k}$, the secular perturbations of Ω are due to the last term in Equation (25d) only

$$\left(\frac{\mathrm{d}\Omega}{\mathrm{d}t}\right)_{\mathrm{sec}} = -\frac{Q}{2\mathfrak{m}\sin I} * \sum_{l=1}^{\infty}\sum_{p=0}^{l}(l+1)\left(\frac{a_e}{a}\right)^{l+2} g_l^0 (X_0^{-(l+2),0}|_{l-2p-1=0} - X_0^{-(l+2),0}|_{l-2p+1=0}) * F_{l,O,p} \tag{27}$$

Substituting $l = 2\gamma + 1$, we get, after some reductions, the following formula

$$\left(\frac{\mathrm{d}\Omega}{\mathrm{d}t}\right)_{\mathrm{sec}} = \frac{2Q}{\mathfrak{m}\sin I}\sum_{\gamma=0}^{\infty}(\gamma+1)\left(\frac{a_e}{a}\right)^{2\gamma+3} X_0^{-(2\gamma+3),0} g_{2\gamma+1}^0 A_{2\gamma+1}^{(-1)} \tag{28}$$

It can be shown that $A_m^{(k)} \sim \sin^{|k|} I$ (see e.g. Aksenov, 1986). Therefore, the series (28) also converges in the case $I = 0$, as with the perturbations from the geopotential. Let us substitute

$$X_0^{-3,0} = (1 - e * e)^{-3/2}$$

$$A_1^{(-1)} = -\frac{\sin I}{2}$$

so that considering the term $\gamma = 0$ only

$$\left(\frac{\mathrm{d}\Omega}{\mathrm{d}t}\right)_{\mathrm{sec},\gamma=0} = -\frac{Q}{\mathfrak{m}}\left(\frac{a_e}{a}\right)^3 g_1^0 (1 - e * e)^{-3/2} \tag{29}$$

After making the same reductions as in the case of Equation (27) we finally get

$$\left(\frac{\mathrm{d}\omega}{\mathrm{d}t}\right)_{\mathrm{sec}} = -\cos I\left(\left(\frac{\mathrm{d}\Omega}{\mathrm{d}t}\right)_{\mathrm{sec}} + \left(\frac{\mathrm{d}\Omega}{\mathrm{d}t}\right)_{\mathrm{sec},\gamma=0}\right) - \frac{Q}{\mathfrak{m}}\sum_{\gamma=1}^{\infty}\sum_{k=0}^{\infty}\left(\frac{a_e}{a}\right)^{2\gamma+3}\cos I g_{2\gamma+1}^0 \frac{(\gamma+1)(2\gamma+1)}{(4\gamma+3)}\Xi^{(\gamma)} * \left\{\sum_{\nu=0}^{\min(k,\gamma+1)}(-1)^\nu \frac{(3-\varepsilon_\nu)}{2^{2k}}\binom{2k}{k-\nu} A_{2\gamma+2}^{(2\nu),2k} - \right.$$

$$- \sum_{\nu=0}^{\min(k,\gamma)} (-1)^{\nu} \frac{(3-\varepsilon_\nu)}{2^{2k}} \binom{2k}{k-\nu} A_{2\gamma}^{(2\nu),2k} \Bigg\} \tag{30}$$

The secular perturbations of mean motion l from Equation (25f) are derived by the same procedure

$$\left(\frac{\mathrm{d}l}{\mathrm{d}t}\right)_{\sec} = n - (1-e*e)^{1/2} \left\{ \cos I \left(2\left(\frac{\mathrm{d}\Omega}{\mathrm{d}t}\right)_{\sec,\gamma=0} - \left(\frac{\mathrm{d}\Omega}{\mathrm{d}t}\right)_{\sec} \right) - \left(\frac{\mathrm{d}\omega}{\mathrm{d}t}\right)_{\sec} \right\} -$$

$$- \frac{4Q}{\mathrm{m}} (1-e*e) \sum_{\gamma=1}^{\infty} \sum_{k=0}^{\infty} \left(\frac{a_e}{a}\right)^{2\gamma+3} \cos I g_{2\gamma+1}^{0} \frac{(\gamma+1)(2\gamma+1)}{(4\gamma+3)} \tilde{\Xi}^{(\gamma)} *$$

$$* \left\{ \sum_{\nu=0}^{\min(k,\gamma+1)} (-1)^{\nu} \frac{(3-\varepsilon_\nu)}{2^{2k}} \binom{2k}{k-\nu} A_{2\gamma+2}^{(2\nu),2k} - \right.$$

$$\left. - \sum_{\nu=0}^{\min(k,\gamma)} (-1)^{\nu} \frac{(3-\varepsilon_\nu)}{2^{2k}} \binom{2k}{k-\nu} A_{2\gamma}^{(2\nu),2k} \right\} \tag{31}$$

Let us note that from Equations (30) and (31) we get (reducing to $\gamma = 0$ only)

$$\left(\frac{\mathrm{d}\omega}{\mathrm{d}t}\right)_{\sec,\gamma=0} = -2\cos I \left(\frac{\mathrm{d}\Omega}{\mathrm{d}t}\right)_{\sec,\gamma=0} \tag{32a}$$

$$\left(\frac{\mathrm{d}l}{\mathrm{d}t}\right)_{\sec,\gamma=0} = n + 3\cos I (1-e*e)^{1/2} \left(\frac{\mathrm{d}\Omega}{\mathrm{d}t}\right)_{\sec,\gamma=0} \tag{32b}$$

5. Perturbations Caused by the Induced Electrical Field

These perturbations are given by the first terms in Equations (17a,b), where the component F_φ vanishes. Thus the components of the disturbing force are

$$F_{(r)} = -Q\Omega^{\oplus} a_e \sum_{l,m} \left(\frac{a_e}{r}\right)^{l+1} K_{lm} (l A_{lm} Y_{l+1,m} - (l+1) B_{lm} Y_{l-1,m}) \tag{33a}$$

$$F_{(\vartheta)} = -Q\Omega^{\oplus} a_e \sum_{l,m} (l+1) \left(\frac{a_e}{r}\right)^{l+1} K_{lm} Y_{lm} \sin\vartheta \tag{33b}$$

$$F_{(\varphi)} = \# 0 \tag{33c}$$

After evaluating components of perturbative accelerations in reper fixed to the orbital plane as before and substitution them into the Lagrange equations we get

$$\left(\frac{\mathrm{d}a}{\mathrm{d}t}\right)^{el} = -\frac{Q\Omega^{\oplus} a_e e}{\mathrm{m} \cdot n (1-e*e)^{1/2}} \sum_{l} \left(\frac{a_e}{r}\right)^{l+1} \sum_{q} \frac{1}{2l+1} *$$

$$* \left\{ \sum_{m,p}^{(1)} (l-m+1) F_{l+1,m,p} \Delta_0^{1,2} \left(\begin{bmatrix} -h_l^m \\ g_l^m \end{bmatrix} \sin \Lambda_1^0 - \begin{bmatrix} g_l^m \\ h_l^m \end{bmatrix} \cos \Lambda_1^0 \right) - \right.$$

$$- (l+1) \sum_{m,p}^{(-1)} (l+m) F_{l-1,m,p} \Delta_0^{1,0} \left(\begin{bmatrix} -h_l^m \\ g_l^m \end{bmatrix} \sin \Lambda_{-1}^0 - \right.$$

$$-\begin{bmatrix} g_l^m \\ h_l^m \end{bmatrix} \cos \Lambda_{-1}^0 \Bigg)\Bigg\} + \frac{Q\Omega^{\oplus} a_e (1-e*e)^{1/2}}{\mathfrak{m}\cdot n} \sin I \sum_l \left(\frac{a_e}{r}\right)^{l+1} *$$

$$* \sum_q (l+1) \sum_{m,p} F_{l,m,p} \sum_{i=\pm 1} X_q^{-(l+2),(l-2p+i)} *$$

$$* \left(\begin{bmatrix} h_l^m \\ g_l^m \end{bmatrix} \sin \Lambda_i^0 - \begin{bmatrix} -g_l^m \\ h_l^m \end{bmatrix} \cos \Lambda_i^0 \right) \tag{34a}$$

$$\left(\frac{\mathrm{d}e}{\mathrm{d}t}\right)^{el} = -\frac{Q\Omega^{\oplus}(1-e*e)^{1/2}}{2\mathfrak{m}\cdot n} \sum_l \left(\frac{a_e}{r}\right)^{l+1} \sum_q \frac{1}{2l+1} *$$

$$* \Bigg\{ l \sum_{m,p}^{(1)} (l-m+1) F_{l+1,m,p} \Delta_0^{1,2} \left(\begin{bmatrix} -h_l^m \\ g_l^m \end{bmatrix} \sin \Lambda_1^0 - \begin{bmatrix} g_l^m \\ h_l^m \end{bmatrix} \cos \Lambda_1^0 \right) -$$

$$-(l+1) \sum_{m,p}^{(-1)} (l+m) F_{l-1,m,p} \Delta_0^{1,0} \Bigg(\begin{bmatrix} -h_l^m \\ g_l^m \end{bmatrix} \sin \Lambda_{-1}^0 -$$

$$- \begin{bmatrix} g_l^m \\ h_l^m \end{bmatrix} \cos \Lambda_{-1}^0 \Bigg)\Bigg\} + \frac{Q(1-e*e)^{3/2}}{2\mathfrak{m}\cdot n} \Omega^{\oplus} \sin I \sum_l \left(\frac{a_e}{r}\right)^{l+1} *$$

$$* \sum_q (l+1) \sum_{m,p} F_{l,m,p} \sum_{i=\pm 1} X_q^{-(l+2),(l-2p+i)} *$$

$$* \left(\begin{bmatrix} h_l^m \\ g_l^m \end{bmatrix} \sin \Lambda_i^0 - \begin{bmatrix} -g_l^m \\ h_l^m \end{bmatrix} \cos \Lambda_i^0 \right) - \frac{Q(1-e*e)^{3/2}}{2\mathfrak{m}\cdot n} \Omega^{\oplus} \sin I *$$

$$* \sum_l \left(\frac{a_e}{r}\right)^{l+2} \sum_q (l+1) \sum_{m,p} F_{l,m,p} \sum_{i=\pm 1} X_q^{-l,(l-2p+i)} *$$

$$* \left(\begin{bmatrix} h_l^m \\ g_l^m \end{bmatrix} \sin \Lambda_i^0 - \begin{bmatrix} -g_l^m \\ h_l^m \end{bmatrix} \cos \Lambda_i^0 \right) \tag{34b}$$

$$\left(\frac{\mathrm{d}I}{\mathrm{d}t}\right)^{el} = \frac{Q\Omega^{\oplus} \cos I}{2\mathfrak{m}\cdot n(1-e*e)^{1/2}} \sum_l \left(\frac{a_e}{r}\right)^{l+2} \sum_q (l+1) \sum_{m,p} F_{l,m,p} \sum_{i=\pm 1} X_q^{-l,(l-2p+i)} *$$

$$* \left(\begin{bmatrix} h_l^m \\ g_l^m \end{bmatrix} \sin \Lambda_i^0 - \begin{bmatrix} -g_l^m \\ h_l^m \end{bmatrix} \cos \Lambda_i^0 \right) \tag{34c}$$

$$\left(\frac{\mathrm{d}\Omega}{\mathrm{d}t}\right)^{el} = \frac{Q\Omega^{\oplus}(1-e*e)^{1/2} \cos I}{2\mathfrak{m}\cdot n \sin I} \sum_l \left(\frac{a_e}{r}\right)^{l+2} \sum_q (l+1) \sum_{m,p} F_{l,m,p} \sum_{i=\pm 1} i *$$

$$* X_q^{-l,(l-2p-i)} \left(\begin{bmatrix} g_l^m \\ -h_l^m \end{bmatrix} \sin \Lambda_i^0 - \begin{bmatrix} h_l^m \\ g_l^m \end{bmatrix} \cos \Lambda_i^0 \right) \tag{34d}$$

$$\left(\frac{d\omega}{dt}\right)^{el} = \frac{Q\Omega^{\oplus}(1-e*e)^{1/2}}{2\mathfrak{m}\cdot n} \sum_l \left(\frac{a_e}{r}\right)^{l+2} \sum_q \frac{1}{2l+1} *$$

$$* \Bigg\{ l \sum_{m,p}^{(1)} (l-m+1) F_{l+1,m,p} \nabla_0^{1,2} \left(\begin{bmatrix} g_l^m \\ h_l^m \end{bmatrix} \sin \Lambda_1^0 + \right.$$

$$+\begin{bmatrix} -h_l^m \\ g_l^m \end{bmatrix} \cos \Lambda_1^0\Bigg) - (l+1) \sum_{m,p}^{(-1)} (l+m) F_{l-1,m,p} \nabla_0^{1,0} \Bigg(\begin{bmatrix} g_l^m \\ h_l^m \end{bmatrix} \sin \Lambda_{-1}^0 +$$

$$+\begin{bmatrix} -h_l^m \\ g_l^m \end{bmatrix} \cos \Lambda_{-1}^0\Bigg)\Bigg\} + \frac{Q\Omega^{\oplus}(1-e*e)^{1/2}}{4\mathfrak{m}\cdot n} *$$

$$* \sin I \sum_l \left(\frac{a_e}{r}\right)^{l+2} \sum_q (l+1) \sum_{m,p} F_{l,mp} \sum_{i=\pm 1} \Delta_0^{1,1+i} *$$

$$* \left(\begin{bmatrix} g_l^m \\ -h_l^m \end{bmatrix} \sin \Lambda_i^0 - \begin{bmatrix} h_l^m \\ g_l^m \end{bmatrix} \cos \Lambda_i^0 \right) +$$

$$+ \frac{Q\Omega^{\oplus}(1-e*e)^{1/2}}{4\mathfrak{m}\cdot n} \sin I \sum_l \left(\frac{a_e}{r}\right)^{l+1} \sum_q (l+1) \sum_{m,p} F_{l,m,p} \sum_{i=\pm 1} \Delta_0^{0,1+i} *$$

$$* \left(\begin{bmatrix} g_l^m \\ -h_l^m \end{bmatrix} \sin \Lambda_i^0 - \begin{bmatrix} h_l^m \\ g_l^m \end{bmatrix} \cos \Lambda_i^0 \right) - \cos I \cdot \left(\frac{d\Omega}{dt}\right)^{el} \tag{34e}$$

$$\left(\frac{dl}{dt}\right)^{el} = n + \frac{Q\Omega^{\oplus}}{\mathfrak{m}\cdot n} \sum_l \left(\frac{a_e}{r}\right)^{l+2} \sum_q \frac{1}{2l+1} *$$

$$* \Bigg\{ l \sum_{m,p}^{(1)} (l-m+1) F_{l+1,m,p} X_q^{-l,(l-2p+1)} \Bigg(\begin{bmatrix} g_l^m \\ h_l^m \end{bmatrix} \sin \Lambda_1^0 +$$

$$+ \begin{bmatrix} -h_l^m \\ g_l^m \end{bmatrix} \cos \Lambda_1^0 \Bigg) -$$

$$- (l+1) \sum_{m,p}^{(-1)} (l+m) F_{l-1,m,p} X_q^{-l,(l-2p-1)} \Bigg(\begin{bmatrix} g_l^m \\ h_l^m \end{bmatrix} \sin \Lambda_{-1}^0 +$$

$$+ \begin{bmatrix} -h_l^m \\ g_l^m \end{bmatrix} \cos \Lambda_{-1}^0 \Bigg) \Bigg\} - \cos I \cdot (1-e*e)^{1/2} \left(\frac{d\Omega}{dt}\right)^{el} -$$

$$- (1-e*e)^{1/2} \left(\frac{d\omega}{dt}\right)^{el} \tag{34f}$$

These equations are equivalent to the Equations (25).

Concentrating our attention on the secular perturbations, we see immediately that

$$\left(\frac{da}{dt}\right)^{el}_{\text{sec}} = 0 \tag{35a}$$

$$\left(\frac{de}{dt}\right)^{el}_{\text{sec}} = 0 \tag{35b}$$

$$\left(\frac{dl}{dt}\right)^{el}_{\text{sec}} = 0 \tag{35c}$$

however

$$\left(\frac{\mathrm{d}\Omega}{\mathrm{d}t}\right)_{\mathrm{sec}}^{el} = -\frac{2Q\Omega^{\oplus}\cos I}{m\cdot n(1-e*e)^{1/2}\sin I}\sum_{\gamma=1}^{\infty}(\gamma+1)\left(\frac{a_e}{a}\right)^{2\gamma+3} X_0^{-(2\gamma+1),0} g_{2\gamma+1}^{0} A_{2\gamma+1}^{(-1)} \tag{36}$$

Furthermore, we have

$$\left(\frac{\mathrm{d}\omega}{\mathrm{d}t}\right)_{\mathrm{sec}}^{el} = -\frac{2Q\Omega^{\oplus}}{\mathfrak{m}\cdot ne}(1-e*e)^{1/2}\sum_{\gamma=1}^{\infty}(\gamma+1)\left(\frac{a_e}{a}\right)^{2\gamma+3} X_0^{-(2\gamma+1),0} g_{2\gamma+1}^{0} *$$
$$* \frac{2\gamma+1}{4\gamma+3}(A_{2\gamma+2}^{(0)} - A_{2\gamma}^{(0)}) - \cos I\cdot\left(\frac{\mathrm{d}\Omega}{\mathrm{d}t}\right)_{\mathrm{sec}}^{el} \tag{37}$$

Finally, from Equation (34f) we have

$$\left(\frac{\mathrm{d}l}{\mathrm{d}t}\right)_{\mathrm{sec}}^{el} = n + \frac{2Q\Omega^{\oplus}}{\mathfrak{m}\cdot n}\sum_{\gamma=1}^{\infty}(\gamma+1)\left(\frac{a_e}{a}\right)^{2\gamma+3} X_0^{-(2\gamma+1),0} g_{2\gamma+1}^{0}\frac{2\gamma+1}{4\gamma+3} *$$
$$* (A_{2\gamma+2}^{(0)} - A_{2\gamma}^{(0)}) - \cos I\cdot(1-e*e)^{1/2}\left(\frac{\mathrm{d}\Omega}{\mathrm{d}t}\right)_{\mathrm{sec}}^{el} -$$
$$-(1-e*e)^{1/2}\left(\frac{\mathrm{d}\omega}{\mathrm{d}t}\right)_{\mathrm{sec}}^{el} \tag{38}$$

The comparison of the magnitude of the effects caused by the magnetic versus those caused by the induced electrical field can best be made with the element Ω. We have for the total secular change

$$\left(\frac{\mathrm{d}\Omega}{\mathrm{d}t}\right)_{\mathrm{sec}}^{\mathrm{total}} = \left(\frac{\mathrm{d}\Omega}{\mathrm{d}t}\right)_{\mathrm{sec}}^{\mathrm{mag}} + \left(\frac{\mathrm{d}\Omega}{\mathrm{d}t}\right)_{\mathrm{sec}}^{el} =$$
$$= \frac{2Q}{\mathfrak{m}\sin I}\sum_{\gamma=0}^{\infty}(\gamma+1)\left(\frac{a_e}{a}\right)^{2\gamma+3} g_{2\gamma+1}^{0} A_{2\gamma+1}^{(-1)}(1-K_\gamma) \tag{39}$$

where

$$K_\gamma = \frac{\Omega^{\oplus}\cos I}{(1-e*e)^{1/2}n}\frac{X_0^{-(2\gamma+1),0}}{X_0^{-(2\gamma+3),0}} \tag{40}$$

We can see that

$$K_0 = 0.$$

$$|K_\gamma| < \frac{\Omega^{\oplus}|\cos I|}{n}(1-e*e)^{3/2}, \qquad \gamma \geqslant 1$$

so that

$$\left|\frac{\dot{\Omega}_{\mathrm{sec}}^{el}}{\dot{\Omega}_{\mathrm{sec}}^{\mathrm{mag}}}\right| < \frac{\Omega^{\oplus}|\cos I|}{n}(1-e*e)^{3/2} \tag{41}$$

(Value of this factor for LAGEOS is 0.053 – the elements were taken from Rubincam *et al.*, 1986).

6. Numerical Results and Discussion

As was already stated, interest in the problem discussed was aroused by the possible usage of LAGEOS and LAGEOS X for the measurement of the Lense–Thirring effect (see Ciufolini, 1987). Therefore, the LAGEOS orbital elements were taken as a basis for numerical examples.

Since the series of Gaussian coefficients is limited, we truncated the series in Equations (28), (30), (31), (36), (37) and (38) to the limit $\gamma_{\max} = 4$. Similarly we had to make a limitation of k in Equations (30) and (31) up to $k_{\max} = 30$.

The elements of LAGEOS satellite were taken from Rubincam *et al.* (1986). The orbit of the proposed LAGEOS X differs from them only in value of inclination ($I^{\text{Lageos X}} = 180° - I^{\text{Lageos}}$). The electrical charge of the satellite was taken as $Q = -3 \times 10^{-11}$C, which gives us the possibility to compare our results to that of Ciufolini, 1987. The elements are summarized in the Table I. Table II gives then the numerical results. Miliarcseconds per year were chosen as units for all angular elements as was done by Ciufolini (1987). Whenever two signs occur the upper belongs to LAGEOS and the lower to LAGEOS X (when both results are the same only one sign appears).

TABLE I
Parameters and elements of satellites under computation.

Semi-major axis	12 270 km
Eccentricity	0.004
Inclination	109.9° (or 70.1° in case of LAGEOS X)
Mass of satellite	407 kg
Charge	-3×10^{-11}C

TABLE II
Number results in the case of Table I. Table II shows differences between magnetic perturbations – case I – (computed according to Equations (28), (30) and (31)), magnetic perturbations with the only nonzero Gauss coefficient g_1^0 – case II – (computed according to simple formulas (29) and (32)) and electrical perturbations – case III – (computed according to Equations (36), (37) and (38)).

	$\dot{\Omega}$ (10^{-3}m″/y)	$\dot{\omega}$ (10^{-3}m″/y)	$\delta\dot{l}$ (10^{-3}m″/y)
case I	-2.01	∓ 1.41	± 2.09
case II	-2.02	∓ 1.38	± 2.06
case III	$\pm 0.40 \times 10^{-3}$	$+2.47 \times 10^{-3}$	-12.65×10^{-3}

In Figure 1 surface $\dot{\Omega}_{\text{sec}}^{\text{B},\gamma=0}(e,I; a = a_{\text{Lageos}})$ is computed according to Equations (29).

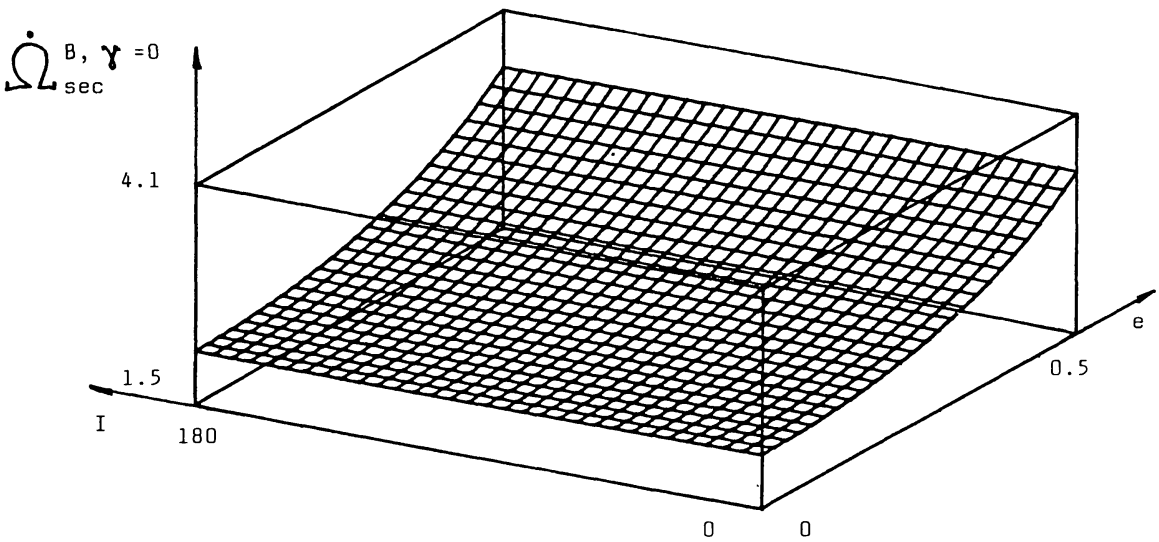

Fig. 1. Surface $\dot{\Omega}^{B,\gamma=0}_{sec}(e, I; a = a_{Lageos})$. Computed according to Equation (29). Units of $\dot{\Omega}$ are chosen to be 10^{-3} m″/y.

The same is done in Figure 2–6 for the other elements and for the perturbations induced by electrical field.

The numerical results confirm and stress the estimate of the geomagnetic field effects as made by Ciufolini, 1987. If we take the Lense–Tirring precession to be $\dot{\Omega}^{LT} = 31\ m''/y$, the effect of the geomagnetic field is

$$|\dot{\Omega}^{GM}| \simeq 5 \times 10^{-5} |\dot{\Omega}^{LT}| \tag{42}$$

The result is valid in case of LAGEOS X, too.

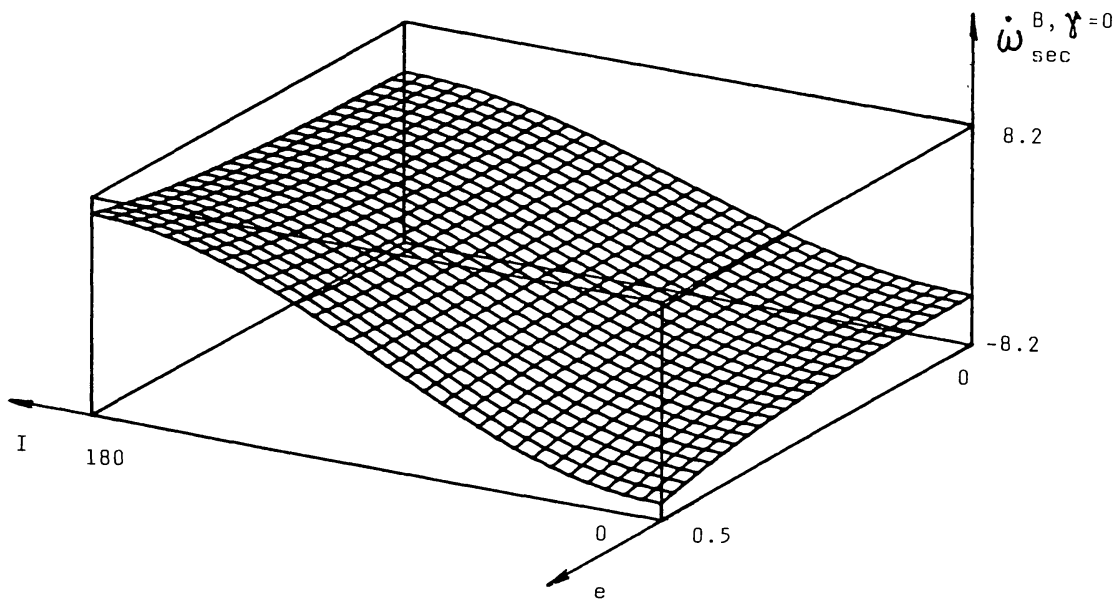

Fig. 2. Surface $\dot{\omega}^{B,\gamma=0}_{sec}(e, I; a = a_{Lageos})$. Computed according to Equation (32a). Units of $\dot{\omega}$ are chosen to be 10^{-3} m″/y.

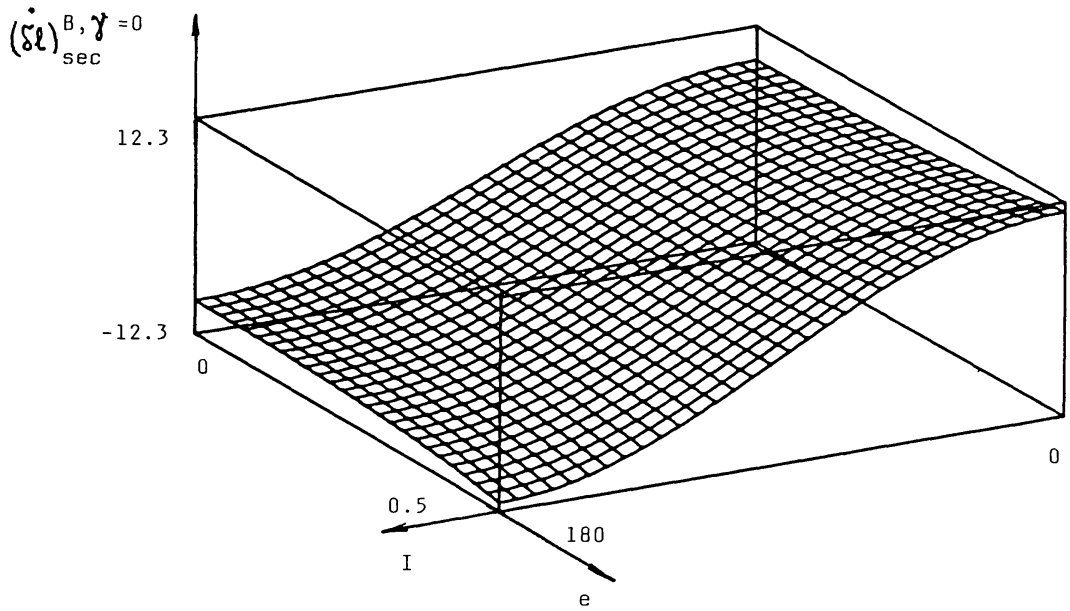

Fig. 3. Surface $(\dot{\delta l})^{B,\gamma=0}_{sec}(e, I; a = a_{Lageos}) \equiv \dot{l}^{B,\gamma=0}_{sec}(e, I; a = a_{Lageos}) - n$ computed according to Equation (32b). Units of $(\dot{\delta l})$ are chosen to be 10^{-3} m″/y.

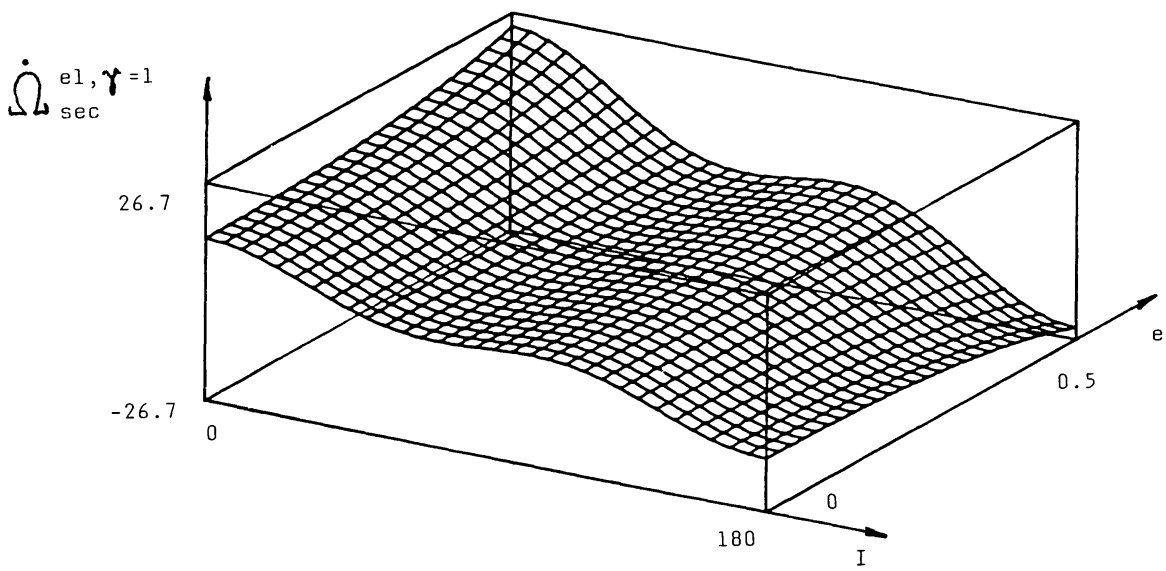

Fig. 4. Surface $\dot{\Omega}^{el,\gamma=1}_{sec}(e, I; a = a_{Lageos})$. Computed according to Equation (36). Units of $\dot{\Omega}$ are chosen to be 10^{-6} m″/y.

Another outcome of our study is the establishment that the determination of secular perturbations caused by geomagnetic field can be made with a high degree of accuracy with the dipole part of the magnetic field. This approximation of the geomagnetic field gives also zero secular and long periodic perturbations in case of inclination and eccentricity. However, the terms which describe the geomagnetic field with higher precession can give rise to long periodic perturbations.

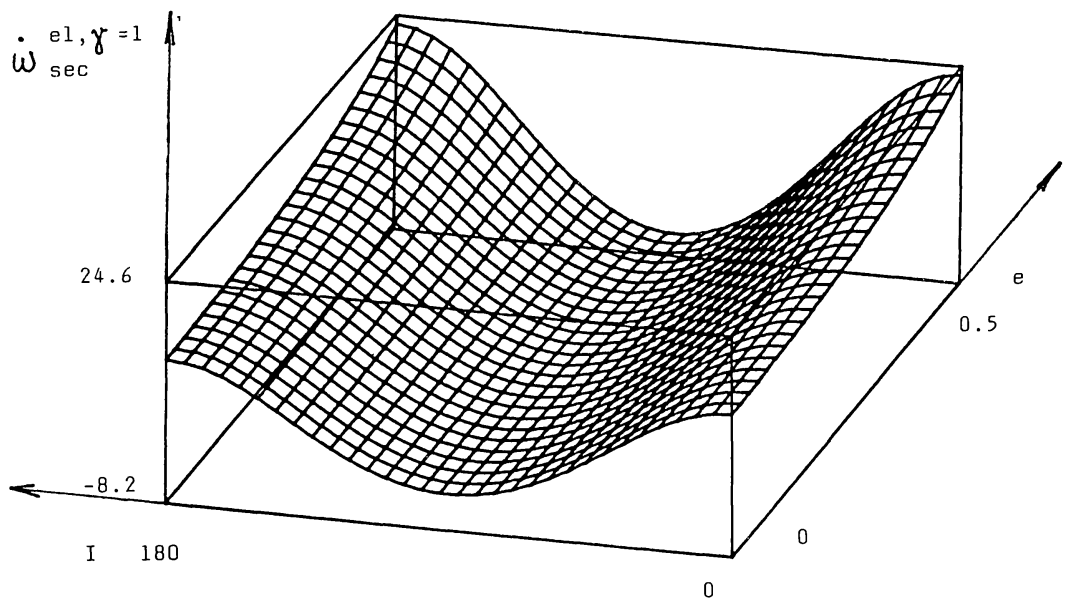

Fig. 5. Surface $\dot{\omega}^{el,\gamma=1}_{sec}(e, I; a = a_{Lageos})$. Computed according to Equation (37). Units of $\dot{\omega}$ are chosen to be 10^{-6} m″/y.

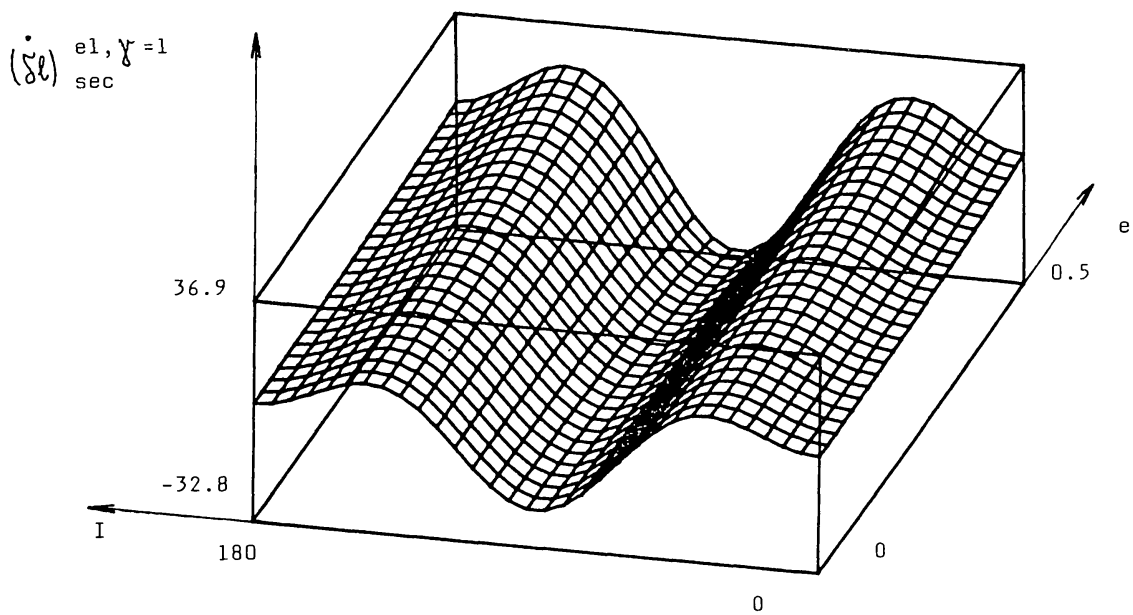

Fig. 6. Surface $(\dot{\delta l})^{el,\gamma=1}_{sec}(e, I; a = a_{Lageos}) \equiv \dot{l}^{el,\gamma=1}_{sec}(e, I; a = a_{Lageos}) - n$ computed according to Equation (38). Units of $(\delta l$ are chosen to be 10^{-6} m″/y.

Also, $(\mathrm{d}a/\mathrm{d}t)_{sec} = 0$. This fact approves us to suppose that the effect of Lorentz force could not explain the still discussed remanent value of the secular change of the semimajor axis of the Lageos orbit of -1.1 mm/day.

A very important value, which affects the results substantially, is the charge of the satellite. We took it to be constant. However, the possible variations of the charge

would give rise to secular perturbations of some elements, like the excentricity and the inclination. The secular change of the semi-major axis will vanish even in the case of a variable charge. The detailed analysis of this effect will be the subject of further study.

Another important effect might arise from the existence of the ionospheric currents, which can contribute to the value of the magnetic induction. This would be of interest especially for high satellite orbits. For LAGEOS, however, 70 nT is possibly maximum value of magnetic induction caused by the ionospheric currents, thus

$$\left(\frac{B^{\text{currents}}}{B^{\text{main field}}}\right)_{\max} \simeq 10^{-3}$$

Acknowledgements

We would like to express our deepest thanks to Dr. Sehnal for numerous and useful comments and encouragement to write this paper.

References

Aksenov E. P.: 1986, *Special Functions in Celestial Mechanics*, Moscow, (in Russian).
Al'pert Ja. L. *et al.*: 1964, *Artificial Satellites in Rare Plasma*, Moscow (in Russian).
Brumberg V. A.: 1972, *Relativistic Celestial Mechanics*, Moscow, (in Russian), chap. 7.2.
Ciufolini I.: 1987, *Celest. Mech.* **40**, 19.
Peddie N. W. *et al.*: 1982, *J. Geomag. Geoelectr.* **34**, 357.
Rubincam D. P. *et al.*: 1986, *Celest. Mech.* **38** 233.
Sehnal L.: 1969, 'The motion of a charged satellite in the Earth's magnetic field', SAO report No. 271.

List of Symbols

G^{gr}	constant of gravitation
n	mean motion
M, a_e	mass and radius of the Earth
$\Omega^{\oplus}$	Earth angular velocity
θ	Greenwich mean time
(g_l^m, h_l^m)	Gauss' coefficients we use a set from Peddie et al., 1982
Q	charge of satellite
m^0	mass of satellite in the locally inertial frame
$\mathfrak{m}$	mass of satellite, Newtonian view
$X_{q(e)}^{n,k}$	Hansen's coefficients
$F_{l,m,p}(I)$	inclination function according to Kaula
$F_{l,m,p}^k(I) = \sin^k I \cdot F_{l,m,p}(I)$	notation in this paper

$A_n^{(n-2p)}(I) = F_{n,o,p}(I)$	A-function according to Aksenov 1986
$A_n^{(n-2p),k}(I) = F_{n,o,p}^k(I)$	notation in this paper
$\varepsilon_i = 2$ for $i = 0$ 1 for $i \neq 0$	notation in this paper
$\Lambda_{\pm n}^{\pm} = ql + (l - 2p \pm 2v \pm n)\omega + m(\Omega - \theta)$	notation in this paper (free $\pm$ in the lhs belonging to $\pm 2v$ in the rhs)
$\Lambda_{\pm n}^{0} = ql + (l - 2p \pm n)\omega + m(\Omega - \theta)$	notation in this paper
$\Delta_{\pm}^{m,\pm n}(e) = X_{q(e)}^{-(l+m),(l-2p\pm 2v\pm n)} - X_{q(e)}^{-(l+m),(l-2p\pm 2v\pm(n-2))}$	notation in this paper (free $\pm$ in the lhs belonging to $\pm 2v$ in the rhs)
$\nabla_{\pm}^{m,\pm n}(e) = X_{q(e)}^{-(l+m),(l-2p\pm 2v\pm n)} + X_{q(e)}^{-(l+m),(l-2p\pm 2v\pm(n-2))}$	notation in this paper (free $\pm$ in the lhs belonging to $\pm 2v$ in the rhs)

(definitions of $\Delta_0^{m,\pm n}(e)$ and $\nabla_0^{m,\pm n}(e)$ are conceptually the same as $\Lambda_{\pm n}^{0}$)

$\Xi_{(e)}^{(\gamma)} = 2\dfrac{1 - e * e}{e} X_{0(e)}^{-(2\gamma+4),1} + X_{0(e)}^{-(2\gamma+3),0} - X_{0(e)}^{-(2\gamma+3),2} + \dfrac{1}{1 - e * e} * (X_{0(e)}^{-(2\gamma+2),0} - X_{0(e)}^{-(2\gamma+2),2})$	notation in this paper
$\tilde{\Xi}_{(e)}^{(\gamma)} = X_{0(e)}^{-(2\gamma+3),0} - X_{0(e)}^{-(2\gamma+3),2}$	notation in this paper

In all summations, where lower and upper limit are not labeled, we assume transformation according this scheme:

$$\sum_{l} \to \sum_{l=1}^{\infty}; \quad \sum_{q} \to \sum_{q=-\infty}^{\infty}; \quad \sum_{l,m} \to \sum_{l=1}^{\infty} \sum_{m=-l}^{l}; \quad \sum_{m,p} \to \sum_{m=0}^{l} \sum_{p=0}^{l}$$

$$\sum_{m,p}^{(1)} \to \sum_{m=0}^{l} \sum_{p=0}^{l+1}; \quad \sum_{m,p}^{(-1)} \to \sum_{m=0}^{l-1} \sum_{p=0}^{l-1}; \quad \sum_{l,k,v} \to \sum_{l=1}^{\infty} \sum_{k=0}^{\infty} \sum_{v=-k}^{k}$$

We accept the upper value of quantities

$$\begin{bmatrix} \pm h_l^m \\ \pm g_l^m \end{bmatrix}, \begin{bmatrix} \pm g_l^m \\ \pm h_l^m \end{bmatrix}$$

when $(l - m)$ is even and lower when $(l - m)$ is odd, as usual.